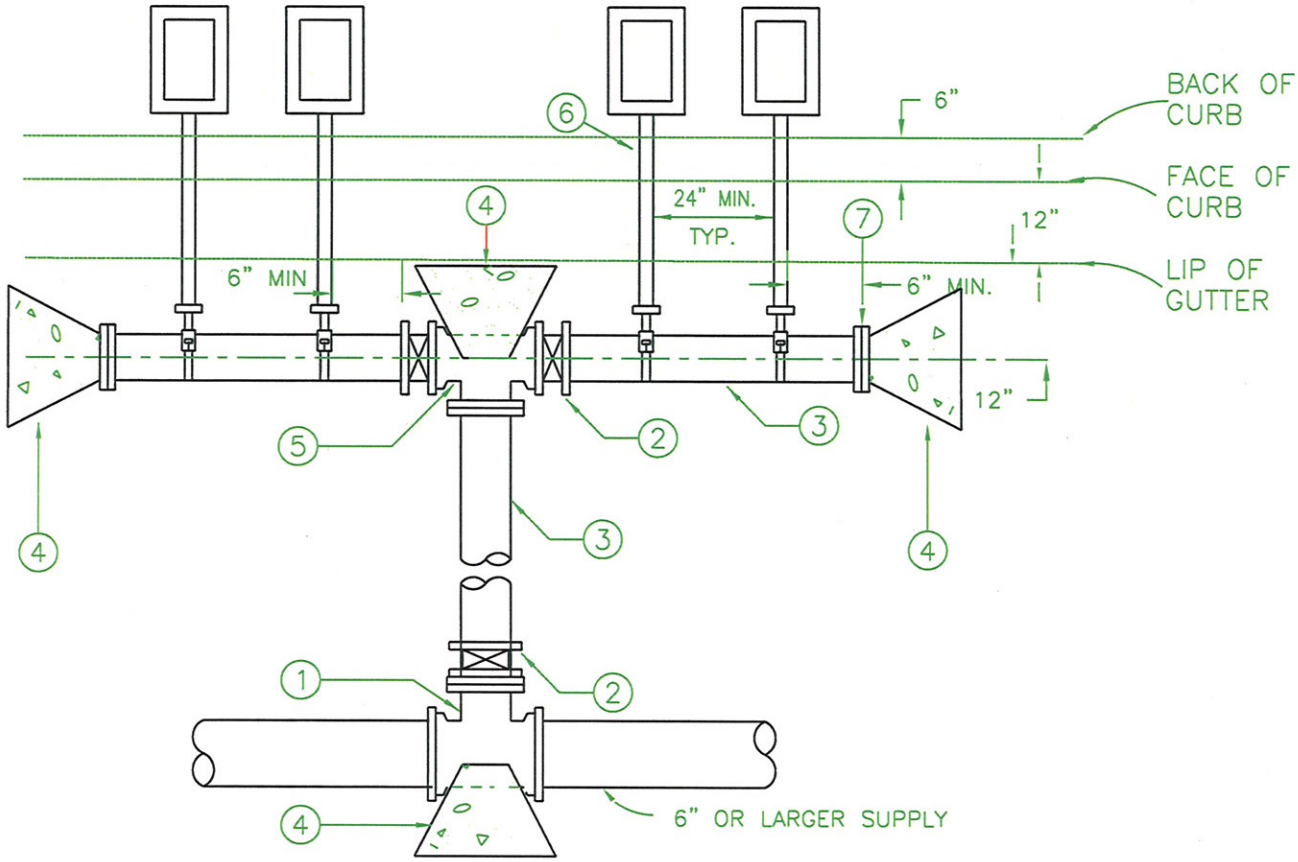

PLAN VIEW

LIST OF MATERIALS

1. 4" TEE, PUSH-ON X FLG
2. 4" FLG'D VALVE X PUSH ON
3. 4" PVC PRESSURE CLASS 150.
4. THRUST BLOCK PER CVWD STD. DWG. W -14.
5. 4" TEE, FLANGED X PUSH ON
6. SERVICE INSTALLATION - SEE DWG. W-1 OR W-2
7. 4" DUCTILE IRON CAP, PUSH-ON RESTRAINED GASKET.

MANIFOLD ASSEMBLY FOR 4 TO 10 SERVICES

REVISIONS		
NO.	DATE	APPROVED

CITY OF SAN JUAN CAPISTRANO

APPROVED

WATER SERVICES MANAGER — DATE 1.15.09

STD. NO. W-4

SHEET 1 OF 1

F:\CVWDSTD\W-04A