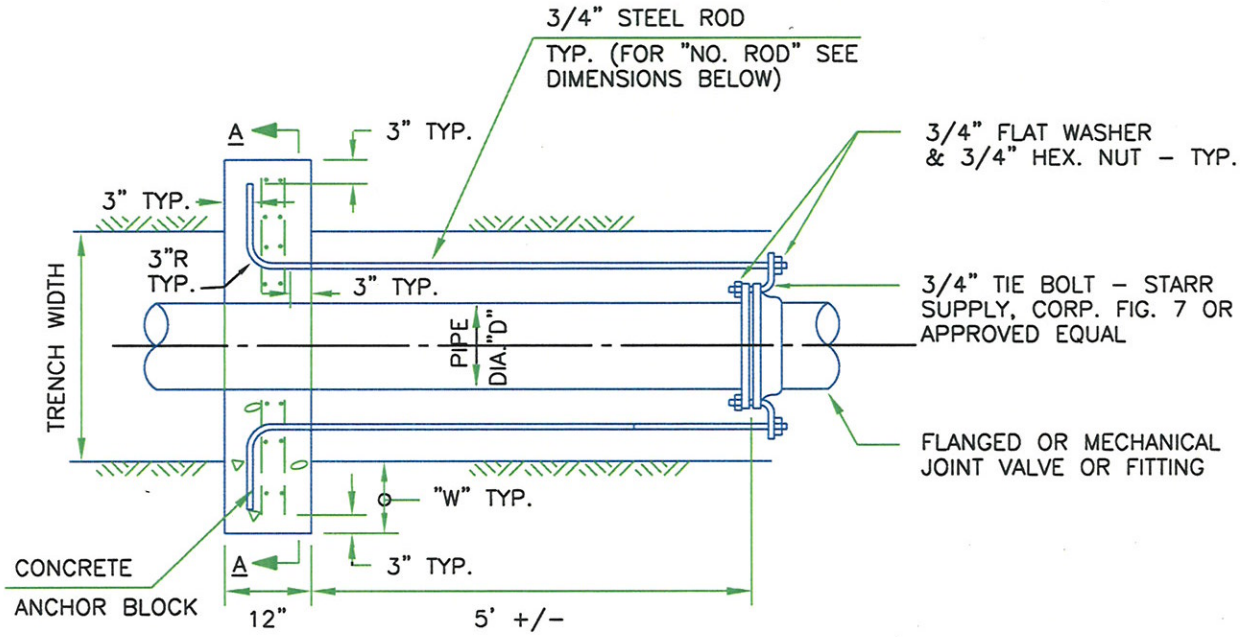

PLAN

ANCHOR BLOCK DIMENSIONS

VARIABLE	6" PIPE	8" PIPE	10" PIPE	12" PIPE
W (INCH)	12"	18"	24"	24"
X (INCH)	8"	12"	18"	24"
NO. ROD	2	2	4	4

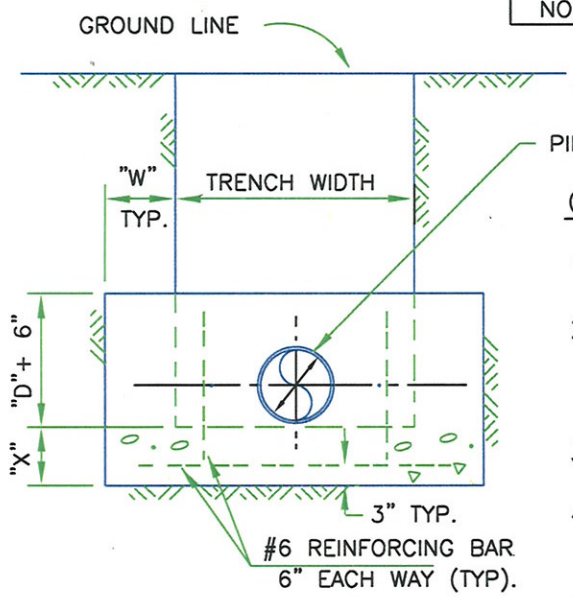

SECTION A–A

CONSTRUCTION NOTES

1. ANCHOR BLOCK SHALL BE TYPE B–2000 (2000 P.S.I. AT 28 DAY).
2. ALL STEEL ROD, BOLTS, ETC., IN CONTACT WITH THE SOIL MUST BE COATED WITH BITUMASTIC. (3M EC–244, KOPPERS 505 OR EQUAL.
3. CONCRETE SHALL BE POURED AGAINST UNDISTURBED EARTH.
4. DIMENSIONS ARE BASED ON 2000 P.S.I. SOIL PRESSURE & 6000 LB. ROD TENSILE STRENGTH.
5. REVERSE TIE BACK ANCHOR SHALL BE USED ON ALL DEAD END LINES WHICH CAN BE EXTENDED IN THE FUTURE.

REVERSE TIE ANCHOR BLOCK ASSEMBLY

REVISIONS		
NO.	DATE	APPROVED

CITY OF SAN JUAN CAPISTRANO

APPROVED 1.15.09

WATER SERVICES MANAGER DATE

STD. NO. W–18

SHEET 1 OF 1

F:\CVWDSTD\W-18A