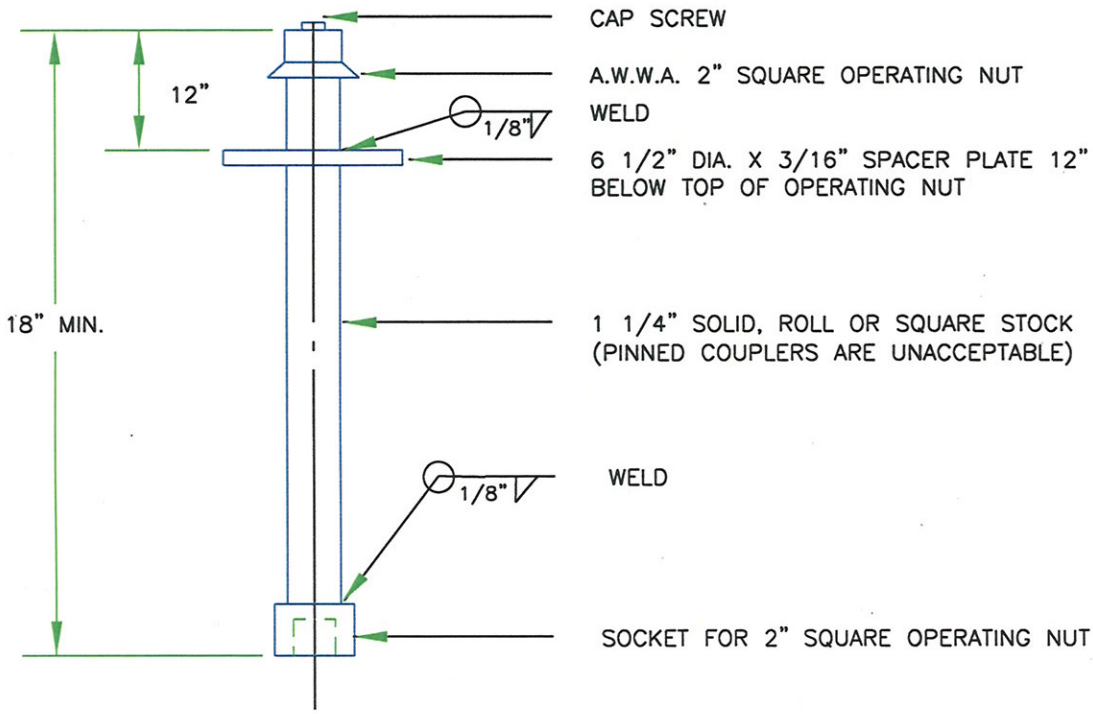

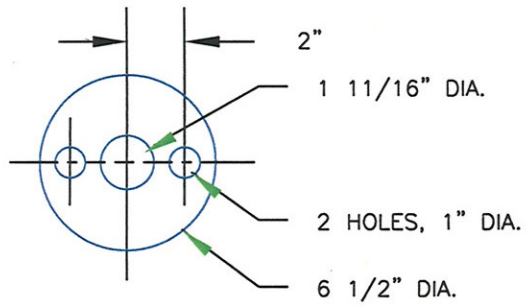

SPACER PLATE

PLAN

CONSTRUCTION NOTES

1. PROVIDE VALVE STEM EXTENSION WHEN DEPTH TO OPERATING NUT EXCEEDS 36" (FABRICATE EXTENSION TO FIELD MEASURMENTS –SEE NOTE 2).
2. NO VALVE STEM EXTENSION SHALL BE LESS THAN 18" IN LENGTH. TERMINATE EXTENSION 18" TO 24" FROM FINISHED GRADE.
3. PROVIDE ADDITIONAL SPACER PLATE WHEN DISTANCE TO BOTTOM SOCKET EXCEEDS 5'.

VALVE STEM EXTENSION

REVISIONS		
NO.	DATE	APPROVED

CITY OF SAN JUAN CAPISTRANO

APPROVED

WATER SERVICES MANAGER — DATE 1.15.08

STD. NO. W-9

SHEET 1 OF 1

F:\CVWDSTD\W-09A